ASSEMBLY MANUAL

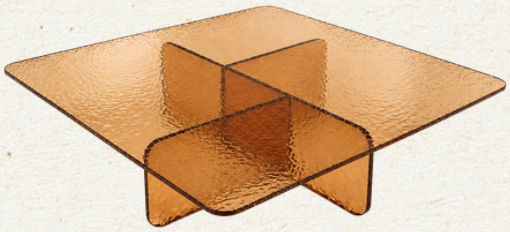

ARIA COFFEE TABLE

IMPORTANT INFORMATION BEFORE STARTING ASSEMBLY:

The assembly must be carried out by at least 2 people.
Do not place the glass tabletop on unprotected hard surfaces, e.g., ceramic floors, iron, etc., as this may cause it to crack.

ASSEMBLY KIT

- Assembly Manual QR Code;
- Handling and Cleaning Manual.
- PVC wedge

STEP BY STEP

1. Position the base in the desired location and place the PVC shims in the places indicated in red in the image next to it.

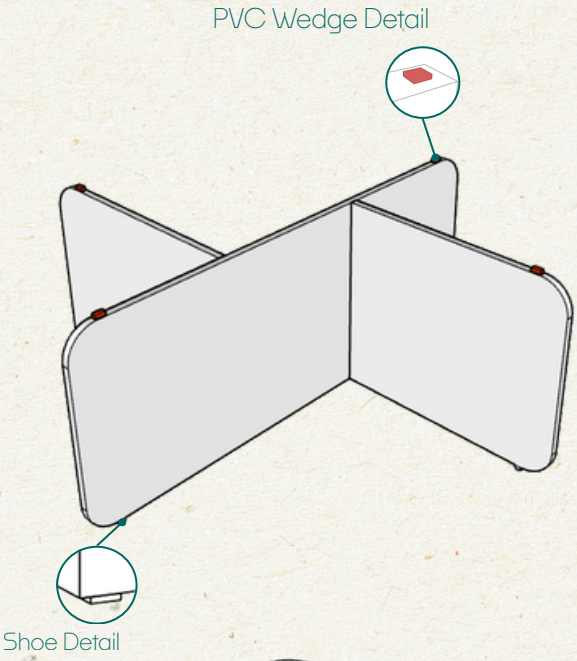

2. Place the tabletop on top, centering it over the base.

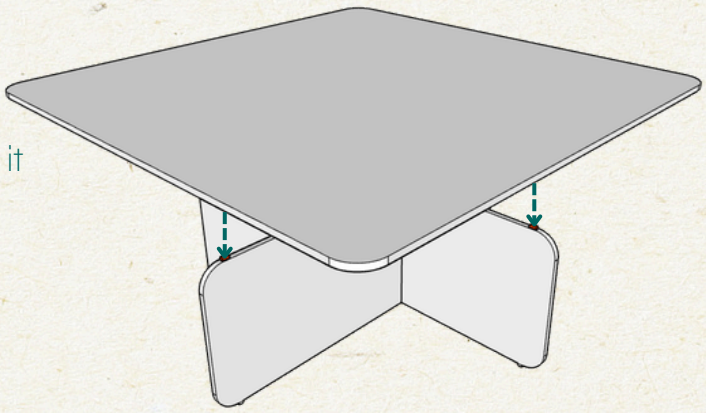

VIDROTEC